A4 VER.2313

PMSM & BLDC DRIVER UP TO 3kW

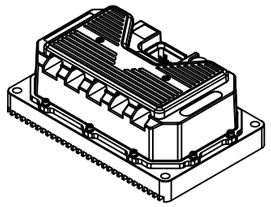

- FOC Control
- SVPWM SINEWAVE
- DTC & MTPA
- BLUETOOTH EXTEND
- ISOLATED CANBUS
- 100% AGING TEST
- SLIM SIZE
- IP67 PROTECT

MAIN CHARACTERS

Rated invert capability 30 minutes continue	3~8KVA Variable radiator	**Max. invert capability** 60 seconds continue	14KVA Under good heat dissipation condition
DC input capability	200A	**Control mode**	FOC SVPWM
Invert efficiency Max	99%	**Communication**	CANBUS
Host software	Windows/Android/ios	**Debug Interface**	Usart, BlueTooth
Ambient temperature	-40~55℃	**Altitude**	4000m
Protect grade	IP67	**Weight**	1.5kg@3KVA
Protection	LVP, OVP, OCP, Temperature monitor, Short Circuit protect		

AVAILABLE MODELS FOR ORDERING

Model	Rated Voltage	Safe Voltage	AC Current limit	DC Current Limit	*NOTES for Optional
A4.72S	72V	<90V	350A	120A	1. CANBUS Terminal Resistor 2. Hall sensor/Encoder 3. (If)Encoder power supply 5V/12V 4. Thermistor model 5. Nature cooling/liquid cooling/customize 6. Electric level of Control port 7. Control port defination customize 8. Ignition constant or one key on/off
A4.72M	72V	<90V	400A	135A	
A4.72L	72V	<90V	450A	150A	
A4.72U	72V	<90V	500A	170A	
A4.96M	96V	<120V	400A	150A	
A4.120M	120V	<135V	350A	120A	
A4.144M	144V	<170V	250A	80A	

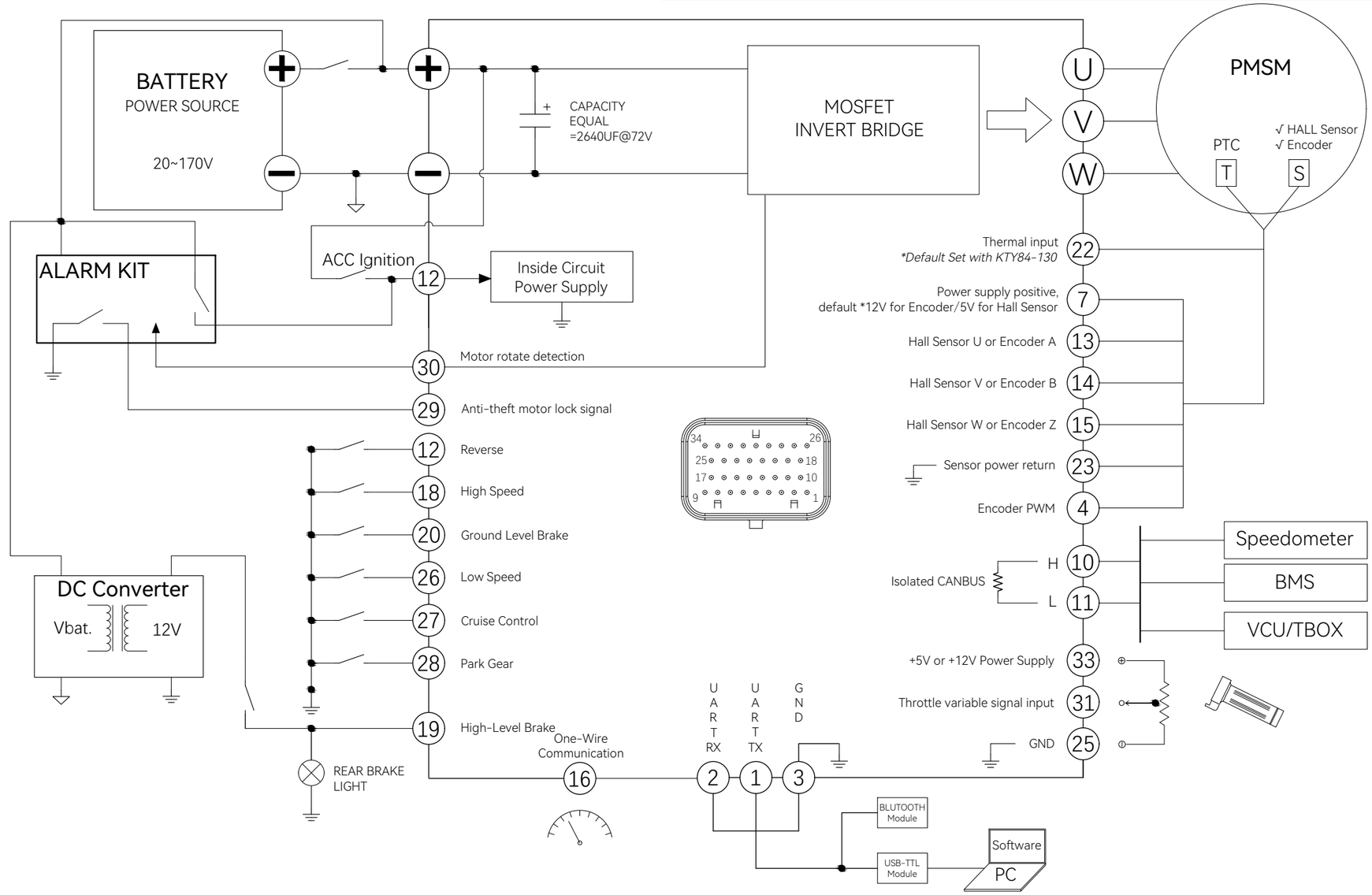

Dimension unit: mm

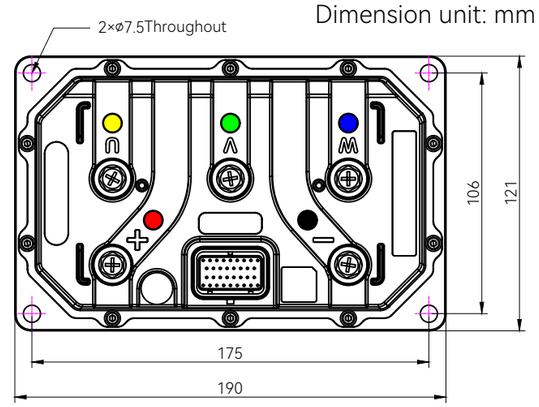

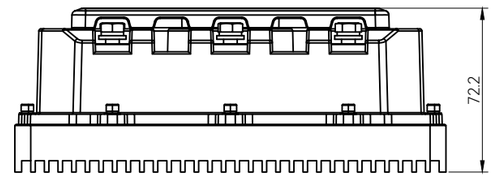

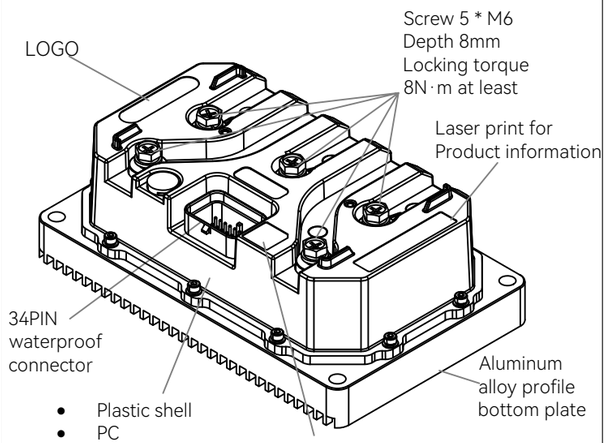

- Plastic shell
- PC
- Customizable colors QR CODE ***Natural cooling***

** Except the default set, accept customize for size,sharp,color of the heat-sink*

Font Usage Statement:
This document adopts the open-source HarmonyOS Sans font, which complies with the SIL Open Font License 1.1 (OFL-1.1).

Version	YY-MM-DD	Design	Confirm	Content updated

Draw	Reviewer	Approver	Name	Specification of A4
技术中心 2025.12.05 袁明敏		技术中心 2025.12.05 薛晗	FILE ID.	APT2313.A0.00E.V2.2
			Page	1 / 1

Shanghai Advanced Power Technology Co., Ltd.